Data-driven Heart Attack Risk Prediction using FNNs

Karnik Chauhan
School of Computer Science and Engineering
Vellore Institute of Technology
Chennai, India
karnik.chauhan2021@vitstudent.ac.in

Nayoneeka Paul
School of Computer Science and Engineering
Vellore Institute of Technology
Chennai, India
nayoneka.paul2021@vitstudent.ac.in

Runi Ghosh
School of Computer Science and Engineering
Vellore Institute of Technology
Chennai, India
runi.ghosh2021@vitstudent.ac.in

Dr. Renjith P N
School of Computer Science and Engineering
Vellore Institute of Technology
Chennai, India
renjith.pn@vit.ac.in

***Abstract*--This work deals with developing a fully connected neural network for heart attack prediction and pays maximum attention to data pre-processing, architecture design, and performance evaluation. The preparation of the data included cleaning through removal of null values and outliers, reshaping datasets into flat arrays, and features normalization using StandardScaler to improve efficiency during learning. The model architecture, implemented using Keras Sequential API, consisted of three hidden layers having ReLU(Rectified Learning Unit) activation and a dropout layer to deactivate 50% neurons to reduce overfitting risks. The output layer had sigmoid activation to predict the probability of a heart attack, thus making it a binary classifier. The model was compiled with the Adam optimizer, binary cross-entropy loss function, and accuracy. It was trained with 300 epochs by having a batch size of 64 and it used validation data and ensured generalization. With 95% accuracy on the test set, predictions were analysed with a classification report. This study hereby shows the potential of FNNs in accurate and reliable heart attack prediction.**

Keywords--Feedforward Neural Network (FNN), Data Pre-processing, StandardScaler, ReLU Activation, Dropout Layer, Sigmoid Activation, Binary Cross-Entropy Loss, Adam Optimizer, Prediction Accuracy

I. INTRODUCTION

The increasing prevalence of heart disease as the principal cause of death around the world has emphasized the urgent need for accurate and effective predictive models which could lead to early medical intervention. Although established diagnostic methods have proven effective, they often lack enough interpretability to be assumed in a clinical environment. Recent advances in machine learning, focusing on the use of Feedforward Neural Networks (FNNs), open promising avenues for this purpose. Feedforward Neural Networks, when used along with (SHAP) Shapley Additive Explanations, provide a unique benefit beyond being able to make accurate predictions, as it offers clarity to factors underlying such predictions. This is critical in establishing trust that healthcare providers are going to understand the 'rationale' behind a model's outcomes.

This paper involves developing an FNN-based heart attack prediction model with incorporation of the SHAP approach for enhancing the interpretability of the results. The model was trained based on a dataset that went through thorough pre-processing, cleaning, removal of outliers, normalization, and reshaping for obtaining most efficiency during learning. The network architecture is built on three hidden layers with ReLU activation and a dropout layer to prevent overfitting. Using a sigmoid activation function, the output layer, the model, therefore, falls under the binary classification family and would predict the likelihood of an attack on the heart. It was trained for 300 epochs using the Adam optimizer with binary cross-entropy loss and accuracy as a measure for evaluation and had its respective accuracy rate at 95% on the test dataset.

The core objective of this paper is that FNNs can make a good prediction of heart attacks and using SHAP for explanation of what are the key features such as age, cholesterol levels, and blood pressure, making the model more interpretable. This is not only to improve prediction accuracy but provide actionable insights regarding determinants of health risks associated with the disease to

practitioners in the healthcare sector. Moreover, this study tries to solve feature selection issues and performance issues in classification by improving the architecture of the model for increased efficiency and generalization.

Further application of this approach will be into the following subsequent related applications, such as predicting other severe health conditions, which include diabetes, cancer and liver disease, but through enhancing the FNN and SHAP framework further. This combination may be used to develop more advanced, explainable decision-support systems in healthcare, which will allow for more personalized treatment and fosters the concept of trust towards AI-driven diagnoses. Further, this model can also be used in conjunction with IoT devices to allow real-time health monitoring and predictive diagnostics. With the growing involvement of the healthcare industry with AI, growth in explainable models such as FNN with SHAP will be an integral source to continuing developing better clinical accuracy and overall quality of care.

II. LITERATURE REVIEW

[1] Neural network classifiers, feeding special attention to feed-forward, fully-connected ANNs have been applied on diverse medical diagnosis including breast cancer, heart disease, and predicting diabetes. Their training methodology through backpropagation, or BP, and the influence of PSO on generalization across different network architectures make BP more efficient but PSO more generalizable. No prior work has taken into consideration the influence of network architectures and depth of training. The study addresses this by providing a thorough evaluation of both methods, giving prominence to the strengths and limitations in medical diagnosis applications.

[2] Advances in Intelligent systems, especially machine learning algorithms, have provided substantial health care advances and quicker and more accurate diagnostic tools. Feedforward neural networks, specifically single-hidden layer feedforward neural networks trained using logistic regression, the LogSLFN, have been proven successful for two-class decision problems. However, recent efforts are directed toward expanding the capacity of LogSLFN to multi-class problems through parallel and cascaded architectures. Those extensions make use of the universal approximation theorem, which ensures that a single hidden layer can approximate complex functions. Experimental results further confirm that these extended models, in particular the parallel approach, outperform other state-of-the-art methods in medical applications, such as in cancer diagnosis and in liver fibrosis staging, with worthwhile improvements over the previous ones.

[3] The rapidly increasing incidence of cardiovascular diseases and their enormous costs to society have pressed the medical fraternity to seek ways to prevent, detect early, and treat effectively at low costs. Techniques such as classification and clustering in artificial intelligence (AI) and data mining have been promising in improving the quality of healthcare services by deriving valuable knowledge from data. Whereas most of the studies have focused on the prediction of heart disease by different data mining methods, very few have focused on achieving an accurate diagnosis within minimum cost and time. The latest work illustrates research on using Particle Swarm Optimization together with Feedforward Neural Networks with Backpropagation to conduct feature selection. The study reduced 13 features to 8 optimized ones, with a high accuracy rate of 91.94%, underlining possibilities towards the use of AI-driven approaches towards an efficacious yet cost-effective heart disease diagnosis.

[4] The health care sector is facing rising pressure to implement new technology that will bring better quality services, especially in the face of chronic disease management and limitations placed by human and infrastructural capabilities. Integration of IoT, cloud computing, and mobile systems has emerged as critical for continuous health monitoring. To overcome the above problems, recent developments in health monitoring systems addressed the use of cloud-based architectures. Extraction of fractal values from ECG data has been implemented in this paper with Higuchi's method, which has not been broadly explored as a support tool for arrhythmia diagnosis. At classification evaluation for this system, the SVM achieved the greatest classification accuracy for fractal features over feedforward and feedback neural networks. Interestingly, the sensitivity of both SVM and feedforward neural network showed equivalent results, which indicates good performance of both of them in arrhythmia detection.

[5] The latest innovations in smart healthcare were developed on the basis of a combination of cloud computing, artificial intelligence, and the Internet of Things that transform traditional ways through which healthcare systems work. Major opportunities are associated with the networking of AI and IoT toward medical services, especially disease detection. Among the popular studies being carried out presently, one of them is data collection through IoT devices analyzed using AI tools for diagnosing purposes. Thus, in this scenario, it is established that the results from the CuSO-MuLSTM model compare and uses the cascaded short-term memory

model with its combination, optimized with Cuckoo search optimization and thus improved accuracy toward the diagnosis of cardiac disorders. This is because the model results coming out from the disease detection focus upon were highly accurate for both diagnostics of heart diseases and diabetes, which is to say, it is standing to have great potential as an intelligent tool for the smart healthcare systems.

[6] Two of the most critical methods used in Explainable AI, SHAP and LIME, are applied to medical model predictions to understand and justify these predictions. While these methods identify the most significant features driving decisions, their performance must be evaluated. In this work, a new quantitative measure for the assessment of XAI techniques has been proposed based on decision tree complexity: namely total depth of the tree and average weighted class depth. While the results showed that SHAP is more trivial and scalable than LIME, giving a better view of feature importance, these conclusions effectively demonstrate how SHAP can be used to improve the transparency and performance of even the most black-box models, such as feedforward neural networks.

[7] Early hepatocellular carcinoma recurrence after microwave ablation is crucial for the betterment of patient outcomes. In this work, by using machine learning models such as random forest, support vector machine, and eXtreme Gradient Boosting (XGBoost) along with logistic regression (LR), ER risk prediction has been adapted. A performance comparison between the two models was found. The results demonstrated that the XGBoost model generally outperformed LR for all datasets as it achieved a maximum accuracy of 0.75 to 0.76 in area under the ROC curve. After that, SHAP and LIME algorithms were applied for model interpretation in explaining the factors associated with the risk. That may provide useful hints for post-ablation surveillance and treatment strategies for HCC.

[8] DNA methylation is an essential epigenetic modification system that controls gene expression with age-related changes potentially to be applied for the prediction of biological age. The goal of the present study was to create a model for predicting biological age based on human methylation data via machine learning with XGBoost, LightGBM, and CatBoost techniques. SHAP analysis revealed 15 sites of methylation associated with the age of biological and cg23995914 was the most significant identified site of methylation. GO enrichment and KEGG analyses were used to provide some insights into the biological relevance of these loci to methylation, which fed into understanding the changes in epigenetic functions related to aging.

[9] This paper analyses changes in lymphocytes induced by radiotherapy in patients suffering from breast cancer, applying machine learning algorithms, particularly Extreme Gradient Boosting (XGBoost), to predict radiation-induced lymphopenia. A good generalization performance was achieved with accuracy of 0.764 and an independent cohort's ROC-AUC of 0.841. The feature attribution analysis using SHAP demonstrated that baseline lymphocyte count, platelets, and monocytes were protective, whereas taxane-only chemotherapy had a lower risk for lymphopenia than combinations of anthracycline-taxanes. Moreover, the authors pointed out that the volume of irradiation is much more important than the dose to cause lymphopenia, and a dose <4Gy was much less harmful.

[10] Based on machine learning algorithms, an internal and external validated risk prediction model for Diabetic Nephropathy (DN) is developed. LASSO and RFE were incorporated into data cleaning and feature selection. There were 15 key variables found after these techniques. Of ten models, the best performance was achieved by Random Forest, which reached an ROC area of 0.912 in the test set and 0.828–0.863 in two cohorts. The model demonstrates high predictive and generalization abilities for early diagnosis and screening of DN in the clinical setting. In addition, an online platform based on this model was developed.

III. METHODOLOGY

A. Data Collection and Pre-Processing

The data used to make the predictions for a heart attack originated from a reliable medical database with the records of patients with critical indicators of cardiovascular health. The dataset has attributes like age, cholesterol levels, systolic blood pressure, and many other relevant features necessary for predicting heart attack risks. With this in mind, to ensure better performance, the following steps of preprocessing were done:

- **Data Cleaning:** All duplicates and inconsistent records have been eliminated; missing values are addressed through imputation and the dataset is kept valid.
- **Normalization and Scaling :** Continuous features, such as age, cholesterol, and blood pressure were standardized so all variables have a mean of zero and unit variance. This ensures that algorithms converge much faster and will run more efficiently during training.
- **Feature Selection:** Using statistical techniques along with the domain knowledge, it was able to retain only the

most impactful attributes, thus reducing the complexity of the model without losing important information.

B. Model Selection and Training

To produce a prediction for the probability of a heart attack, the choice of building a Feedforward Neural Network (FNN) was made since this technique had proven to be very effective with classification and also could learn the difficult, non-linear relationships in the data. The FNN had three hidden layers and ReLU activation with dropout to prevent the possibility of overfitting, whereby 50% of neurons are kept de-activated during training. The output layer deployed the sigmoid function to return two classes, projecting the chance of having a heart attack.

Keras and TensorFlow were the libraries used; in addition, Adam optimizer with the binary cross-entropy loss function was deployed in order to train the model. The accuracy of the model was utilized for testing along with some other metric classifications over a specific test set. It has been trained to 300 epochs with the batch size of 64.

C. SHAP Implementation for Interpretability

A significant focus of this research was enhancing the interpretability of the FNN model. For that, we used an advanced technique called SHAP (Shapley Additive Explanations), which generates model explanation with the view of interpretability for the prediction. SHAP values are used to describe how age, cholesterol, and blood pressure etc., contribute to predicting whether a given patient will or won't have a heart attack. By applying SHAP, we hence would then be able to explain which features have predominantly driven the model's choice, thereby enhancing its transparency for better implication by the healthcare providers.

This additive property of SHAP has enabled clear decompounding on the contribution of every individual feature to final prediction, which thus gives the clinicians understanding on what the model produces, thus ability to trust the model. This is particularly important in medical applications because the interpretation of factors behind a prediction can considerably enhance the acceptance of AI tools for use in clinical settings.

D. Model Evaluation and Web Application Deployment

We tested the improved performance of the FNN model with SHAP. There are many classification metrics available, such as precision, recall, and the F1 score. In addition, with tremendous testing accuracy of 95%, this model performed well.

After obtaining such assurance of accuracy and reliability of the predictive model, it was implemented within the scope of a web application. This application allows healthcare professionals to input patient-specific data, enabling real-time predictions regarding the possibility of a heart attack. The SHAP explanations allow for clear expression of which individual features had led to a particular prediction. This could, therefore, be interpreted in the context of the model's output by the user, thereby having healthcare professionals better informed when deciding treatment in accordance with the outcome from the model.

IV. MODEL ARCHITECTURE

A feedforward neural network (FNN) is the most popular artificial neural network, where the signal is strictly forwarded without involving any feedback from the output layer back to the input and hidden layers. The FNN architecture is very good for classification, regression, or pattern recognition problems because such complex, non-linear relations within data can be modeled well by this architecture.

A. Structure and Functionality

a. Input Layer: The FNN begins with an input layer in Figure 1, and each neuron represents a characteristic of the dataset. In the case of prediction of heart attack, the input layer consisted of the important attributes such as age, cholesterol level, blood pressure, and fasting blood glucose level.

b. Hidden Layers: This network has a structure of three hidden layers in Figure 1 targeted towards revealing latent interactions in the input data. The neuron within all the hidden layers performs a weighted sum of its inputs, adds a bias term and then feeds it to a ReLU activation function. The ReLU activation function is inexpensive computationally and has so far been able to represent interaction between health indicators through its introduction of non-linearity.

c. Output Layer: It is the final layer of FNN in Figure 1, it applies the sigmoid activation function. The outcome from this function is a probability value between 0 and 1. It would therefore classify the likelihood of heart attack or not. This in turn makes FNN proper for the binary classifications.

d. Training process: The model uses an algorithm based on back-propagation in Figure 1, which propagated errors between predicted and actual outputs backward through the adjustment of weights and biases to continually be improved at each iteration. Adam optimiser was used to maintain efficient updates for the model's weights, the efficiency came in because binary cross-entropy was being used as the measuring function of loss while training.

e. Preventing overfitting: A dropout layer was added to the architecture in Figure 1, such that, during training, it deactivated 50% of the neurons at a random basis, thus preventing the network from overreliance on particular neurons that tend to make overfitting.

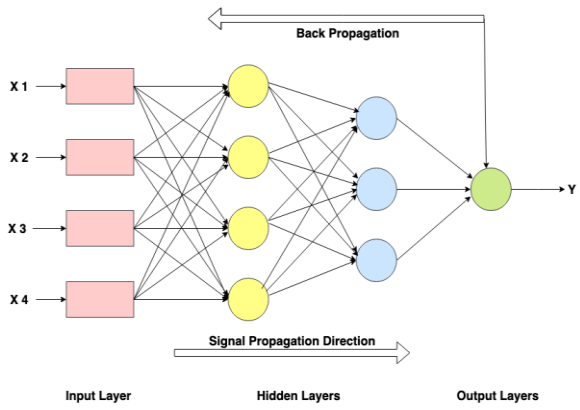

Figure 1: Multilayer perceptron (MLP) network

B. Application in Heart Attack Prediction

This paper designs an FNN particularly to predict heart attack risks for specific patients given their relevant data. Having predominantly pre-processed the dataset by cleaning it, normalizing it, and then selecting pertinent features for the FNN, the data was fed into the neural network. Then, the training of the FNN was carried out with 300 epochs in batches of size 64 so that there could be exposure to data for learning robust patterns. Such an architecture aptly learnt complex, non-linear relations among the input features and the target variable with an accuracy of 95% at testing.

C. Benefits of Using FNN

Flexibility: FNNs can be used with different types of input data and can easily be scaled up by adding more layers or by adding in more neurons.

Ability to learn non-linear relations: Activation functions such as ReLU enable FNNs to learn interactions between variables that most linear models will completely miss.

High Predictive Accuracy: With strong architecture and an enhanced training that the FNN model has, it was really accurate in forecasting the heart attack of patients at risk.

V. INTERPRETABILITY WITH SHAP

We also used SHAP with the feedforward neural network in order to enhance the interpretability of the model. How the contributions of each feature are functioning toward providing predictions from the model is really broken down in lots of detail by SHAP; sometimes, this can be hard to achieve in practice in a clinical setting.

A. Key Implementation Details

Feature Contribution Analysis: Using SHAP, the contribution of significant features such as age, cholesterol, and blood pressure towards the output of the model is considered.
For instance,

- A **positive** value by SHAP indicates that a feature contributes to the probability of having a heart attack. For example - high cholesterol
- A **negative** value in SHAP results indicate that the feature contributes to lessening the chance of having a heart attack. For example - low blood pressure.

Visualization of the Important Features: SHAP Summary plots for each feature were produced to get an idea of the contribution of every feature toward the predictions.
These plots easily reveal which of the features is most impactful in making predictions.
For instance,

- The age and cholesterol are the highest predictors.
- Variability of each feature under different predictions.

Interpretability for Clinicians: SHAP can be considered as of immense value to make the model's predictions transparent to healthcare professionals. Here it shows how feature values influenced the outcome, letting the model provide early interventions of actionable insights.

Therefore, this association of FNN and SHAP brings not only promising predictability enhancement but also satisfies the utmost critical requirement of transparency in AI-driven applications for healthcare. That makes the model more accepted and trustworthy in clinical environments.

B. Novel contributions of SHAP

Feature Interaction Analysis: Beyond individual contributions, SHAP explains feature interactions such as how high cholesterol in conjunction with old age heightens the risk of heart attack, enabling clinicians to come up with more complex insights.

Threshold Sensitivity Insights: SHAP can be interpreted to provide critical thresholds for features (for example - cholesterol > 200 mg/dL drastically

increased risk), allowing healthcare providers to present actionable intervention limits.

Identification of Outliers: The extreme SHAP values can be used to flag anomaly cases in the data set (patients with unusual risk profiles) for further clinical review.

VI. RESULTS

A. Correlation Analysis of Heart Attack Prediction

Diagonal Values (Correlation = 1):
The diagonal cells in Figure 2 indicate a perfect correlation for each feature with itself, just as we expected.

Strong Positive Relationships:

- The data in Figure 2 indicates the thalassemia attribute (thal) to have a moderate correlation with the target variable (num) at 0.51, which most likely represents the heart disease presence or absence.
- The Chest pain type (cp) shares a moderate correlation coefficient with the target variable at 0.4 in Figure 2; it underlines the fact of its relevance to heart attack prediction.
- Thalach, or the maximum heart rate, and slope, measured at 0.58, appear strongly correlated in Figure 2. This correlation suggests an intrinsic relationship between exercise-induced heart rate and the slope of the peak exercise segment.

Significant Negative Correlations:

- Thalach and num (-0.42): Greater max heart rate attained (thalach) is negatively correlated with the probability of heart disease in Figure 2.
- oldpeak and thalach (-0.39): Depression created by exercise relative to at rest (oldpeak) is negative with maximum heart rate achieved in Figure 2.

Lack or Inadequate Correlation: Characteristic such as fasting blood sugar (FBS) and resting electrocardiographic results (RESTECG) Figure 2 has a relatively weak correlation with variables, and thus might not be significant predictors in the given dataset.

Insights into Model Development: Thal, cp, oldpeak, slope, and thalach are moderate to strongly correlated with the target variable, either num or with other significant predictors in Figure 2. It should thus be selected for, during feature selection. Features that are weakly correlated, such as fbs and restecg, merit reconsideration or further evaluation in view of their prognostic implications.

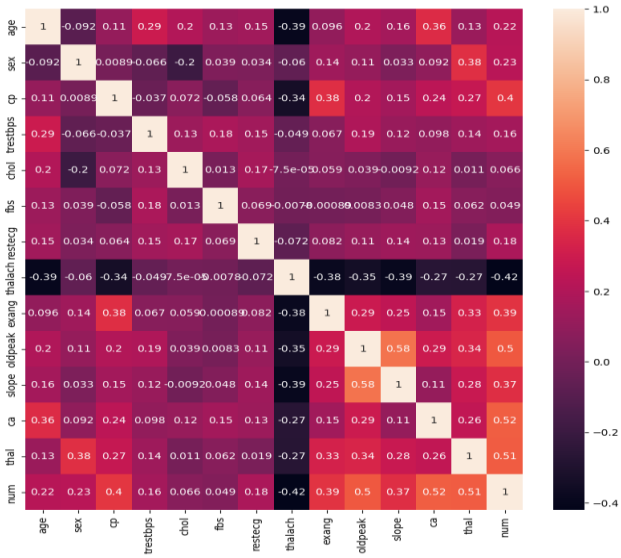

Figure 2: Correlation heatmap for heart disease dataset

B. SHAP Visualization Insights

- **x-axis:** Shows the values for SHAP, which are quantifications of how each feature contributes to the prediction in Figure 3.
- **y-axis:** Lists the most important characteristics in ranked order in Figure 3. For example: cholesterol, age, blood pressure.
- **Color Gradient :** This is interpreted as the values of the features: low is to be represented by blue and high by red in Figure 3.
  For example, greater cholesterol levels (red), it was observed, positively correlated with heart attack risk predictions.

C. Role of SHAP in Our Model

The integration of SHAP in Figure 3 allowed us to move beyond merely achieving high accuracy (95%) with the FNN model to making its predictions interpretable. By applying SHAP:

- We found and graphed significant contributors of the predicted values from the model in Figure 3.
- Enabled actionable insights, such as recognising factors (for example - raised cholesterol) need to be intervened early.

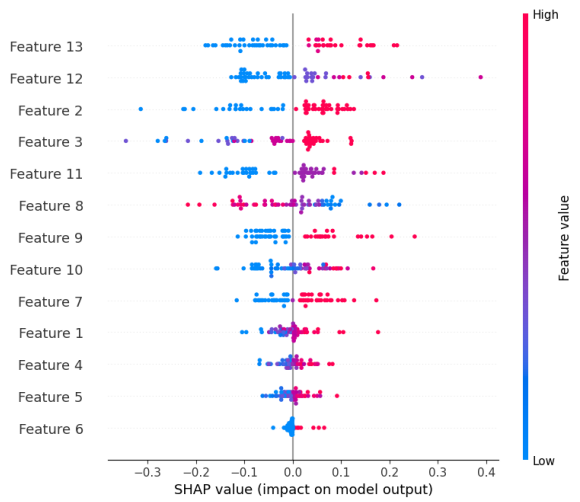

Figure 3: SHAP summary plot

VII. EVALUATION AND PREDICTION

The Keras method **model.predict** serves the purpose of generating predictions from a trained neural network model. This method accepts the features as input data and computes the output of the model for each individual example in the input dataset. The activation function used in the final layer of the model determines the output.

In this particular instance:
The last layer uses the sigmoid activation function that gives probabilities between 0 and 1. The value obtained from **model.predict** is a probability, meaning the chance of belonging to the positive class, for example, the chance of having a heart attack.
These probabilities are rounded (**np.round**) to convert them into binary class predictions.

A. Algorithm behind model.predict

model.predict did a forward pass through the neural network.

a. Input Propagation

- This data, including x_test_scaled, is passed through the network.
- Every layer does a different set of operations:
  Weighted Sum: Inputs of the neuron get multiplied by pre-set weights and summed with a bias term. Mathematically:

$$z = \boldsymbol{W}.x + b$$

where:

- $\boldsymbol{W}$: weight matrix of the layer
- x: input vector
- b: bias vector

Activation Function: The computed z is passed through an activation function (e.g., ReLU or sigmoid). For the sigmoid function:

$$sigmoid(z) = \frac{1}{1 + e^{-z}}$$

b. Layer-by-Layer Computation

- Output from one layer is the input for the next.
- For instance, within this framework this comprises:
  - 64 neurons using ReLU activation in Layer 1.
  - Moving on to 32 neurons using ReLU activation in Layer 2.
  - Transition into 16 neurons with ReLU activation function in Layer 3.
- Applying dropout for regularization.

c. Final Output Calculation

The last layer applies the sigmoid activation function that transforms the weighted sum into a probability score. For the purpose of a binary classification:

- A value around 1 means that the positive class is more likely to occur.
- A value close to 0 indicates a higher chance of being from the negative class.

d. Batch-Wise Computation

It is a batch-processed input data for efficient computation in dealing with large data. The batch size was set at 32 during the training phase.
The operations within **model.predict** are supported by:

TensorFlow Backend: TensorFlow handles the matrix computations (e.g., multiplication, addition) efficiently using CPU/GPU acceleration.
It uses quite optimized libraries, such as cuBLAS, for deep learning.

Forward Propagation Algorithm: Here, the inputs propagate through layers and identify the possible outputs for each neuron. Eventually, the algorithm produces a prediction. It just performs an inference step without conducting any form of backpropagation or calculation of gradient-whereas training would.

Sigmoid Activation in Output Layer: This interprets raw output or logits into corresponding probabilities in the context of classification tasks.

Batch Processing: Data is processed in blocks with iteratively computed predictions for each block so that memory and efficiency can be maximized.

VII. CONCLUSION

This study points out that, despite the FNN being effective for the task, it can predict the risks of heart attacks with a remarkable 95% accuracy, which could make this model a potentially useful tool in the field of healthcare for early intervention and diagnostic purposes. FNNs have significant advantages since they can use complex, non-linear relationships embedded within clinical data to better make predictions even when many factors interact in ways that traditional statistical models may not be able to capture.

One thing that makes this study rather unique and notable is the use of SHAP (Shapley Additive Explanations) to make predictions more interpretable from a model. SHAP provides a means for clinicians to understand specifically which features-whether cholesterol levels, age, or blood pressure-create the highest influence in predicting the likelihood of heart attacks, thereby filling the gap in accuracy of predictions versus interpretability. It is in its interpretability that lies an avenue to clinical acceptance wherein the decision may be grasped by healthcare providers and validated using their own expertise. This model, transforming it from a "black box" algorithm, becomes well-positioned with healthcare professionals' need for transparently based decisions and, in consequence, could also drive benefits through improved patient outcomes and increased levels of trust in AI systems used within the healthcare sector.

Further, the data preprocessing techniques that include normalization, feature selection, and outlier management have ensured overall improvement in the developed model's performance during training since it will be trained with clean and relevant data. The dropout layers alongside ReLU activation functions of its architecture assisted in the avoidance of overfitting and enabled generalization of the model to all kinds of different patients' datasets. Its deployment in a web application allows the integration of this model into a clinical workflow, thus it provides results of patient-specific data back to clinicians in real-time for immediate, action-oriented insights.

A. Future Scope

Further tailoring and optimization of the FNN and SHAP framework to take in various datasets along with disease-specific indicators may make this model even more potent for predicting risks associated with other lifestyle-threatening health conditions, such as diabetes, cancer, and liver disease. Because this model would integrate with IoT devices and wearable technology, real-time health monitoring becomes possible where predictive diagnostics can be made to facilitate proactive management of health founded on continuous, updated data on patients. However, as AI continues to dramatically shape the healthcare landscape, progress in explainable models like FNNs with SHAP will play a key role in improving clinical decision-making by providing insights that are not only highly accurate but also interpretable for practitioners and patients alike. The developments in interpretable artificial intelligence models are expected to provide much-needed serenity when put into practice in the healthcare sector and thus introduces a new paradigm whose characteristics will include transparency, consumer engagement in personalized care, and timely health management. Conclusion The achievement is likely to raise the level of patient care and increase confidence in healthcare solutions that have artificial intelligence integrated into them.

IX. REFERENCES

1. Ince, T., Kiranyaz, S., Pulkkinen, J., & Gabbouj, M. (2010). Evaluation of global and local training techniques over feed-forward neural network architecture spaces for computer-aided medical diagnosis. *Expert Systems with Applications*, *37*(12), 8450-8461.
2. Belciug, S. (2021). Parallel versus cascaded logistic regression trained single-hidden feedforward neural network for medical data. *Expert Systems with Applications*, *170*, 114538.
3. Feshki, M. G., & Shijani, O. S. (2016, April). Improving the heart disease diagnosis by evolutionary algorithm of PSO and Feed Forward Neural Network. In *2016 Artificial Intelligence and Robotics (IRANOPEN)* (pp. 48-53). Ieee.
4. Gupta, M., Thirumalaisamy, M., Shamsher, S., Pandey, A., Muthiah, D., & Suvarna, N. (2022, April). Patient health monitoring using feed forward neural network with cloud based internet of things. In *2022 2nd International Conference on Advance Computing and Innovative Technologies in Engineering (ICACITE)* (pp. 924-931). IEEE.
5. Li, H., & Xia Dou, Y. (2025). Resource optimization in smart electronic health systems using IoT for heart disease prediction via feedforward neural networks. *Cluster Computing*, *28*(1), 21.
6. AHMED, N. A., & Alpkoçak, A. (2022). A quantitative evaluation of explainable AI methods using the depth of decision tree. *Turkish Journal of Electrical Engineering and Computer Sciences*, *30*(6), 2054-2072.
7. An, C., Yang, H., Yu, X., Han, Z. Y., Cheng, Z., Liu, F., ... & Liang, P. (2022). A machine

learning model based on health records for predicting recurrence after microwave ablation of hepatocellular carcinoma. *Journal of Hepatocellular Carcinoma*, 671-684.

8. Zhou, S., Chen, J., Wei, S., Zhou, C., Wang, D., Yan, X., ... & Yan, P. (2024). Exploring the correlation between DNA methylation and biological age using an interpretable machine learning framework. *Scientific Reports*, *14*(1), 24208.
9. Yu, H., Chen, F., Lam, K. O., Yang, L., Wang, Y., Jin, J. Y., ... & Kong, F. M. (2022). Potential determinants for radiation-induced lymphopenia in patients with breast cancer using interpretable machine learning approach. *Frontiers in Immunology*, *13*, 768811.
10. Ma, J., An, S., Cao, M., Zhang, L., & Lu, J. (2024). Integrated machine learning and deep learning for predicting diabetic nephropathy model construction, validation, and interpretability. *Endocrine*, 1-11.